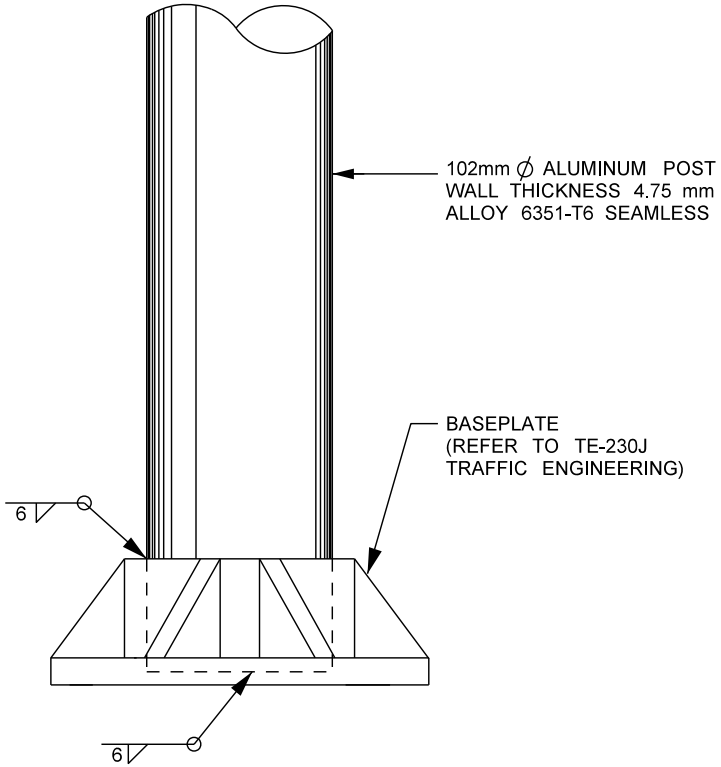

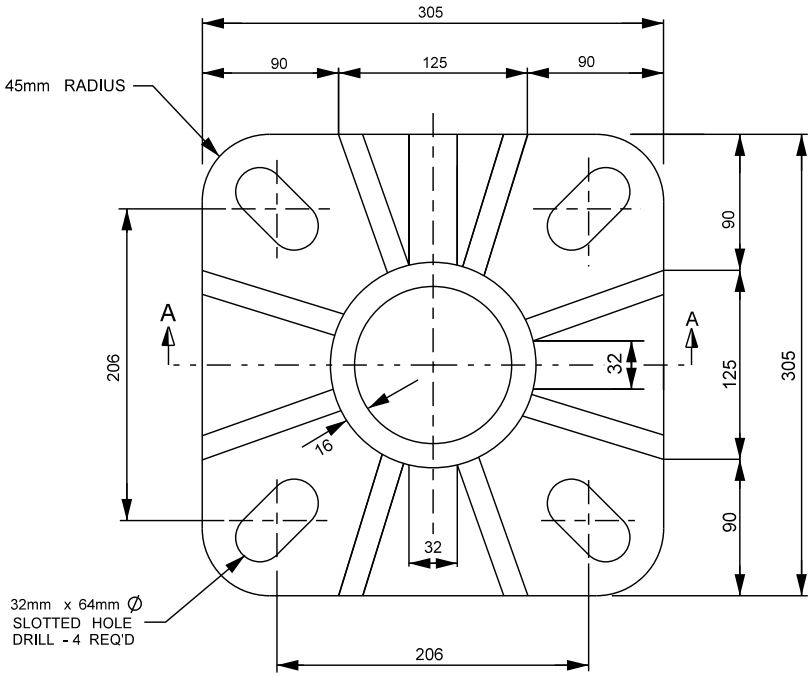

BASEPLATE

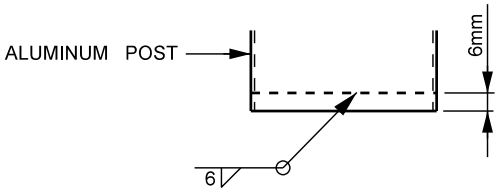

BOTTOM WELDING DETAIL

NOTES:

1. C.W.B. CERTIFIED COMPANY TO W47.2, DIVISION 2, OR BETTER UNDERTAKING ANY WELDING.
2. C.W.B. QUALIFIED WELDERS TO BE UTILIZED ONLY.
3. COATED WELDING WIRE SHALL BE 5356.
4. MIG WELDING PROCESS TO BE USED.

REVISIONS		
DATE	DESCRIPTION	BY

Manitoba
Transportation and Infrastructure
Traffic Engineering

TRAFFIC SIGN POST

ROUND (102mm ∅) ALUMINUM POST WITH CAST BASEPLATE

ORIGINAL
APPROVED BY: _____

SCALE:	N.T.S.
DATE:	APR 2019
PREP.BY:	LB
SHEET:	1 OF 1

TE-230K